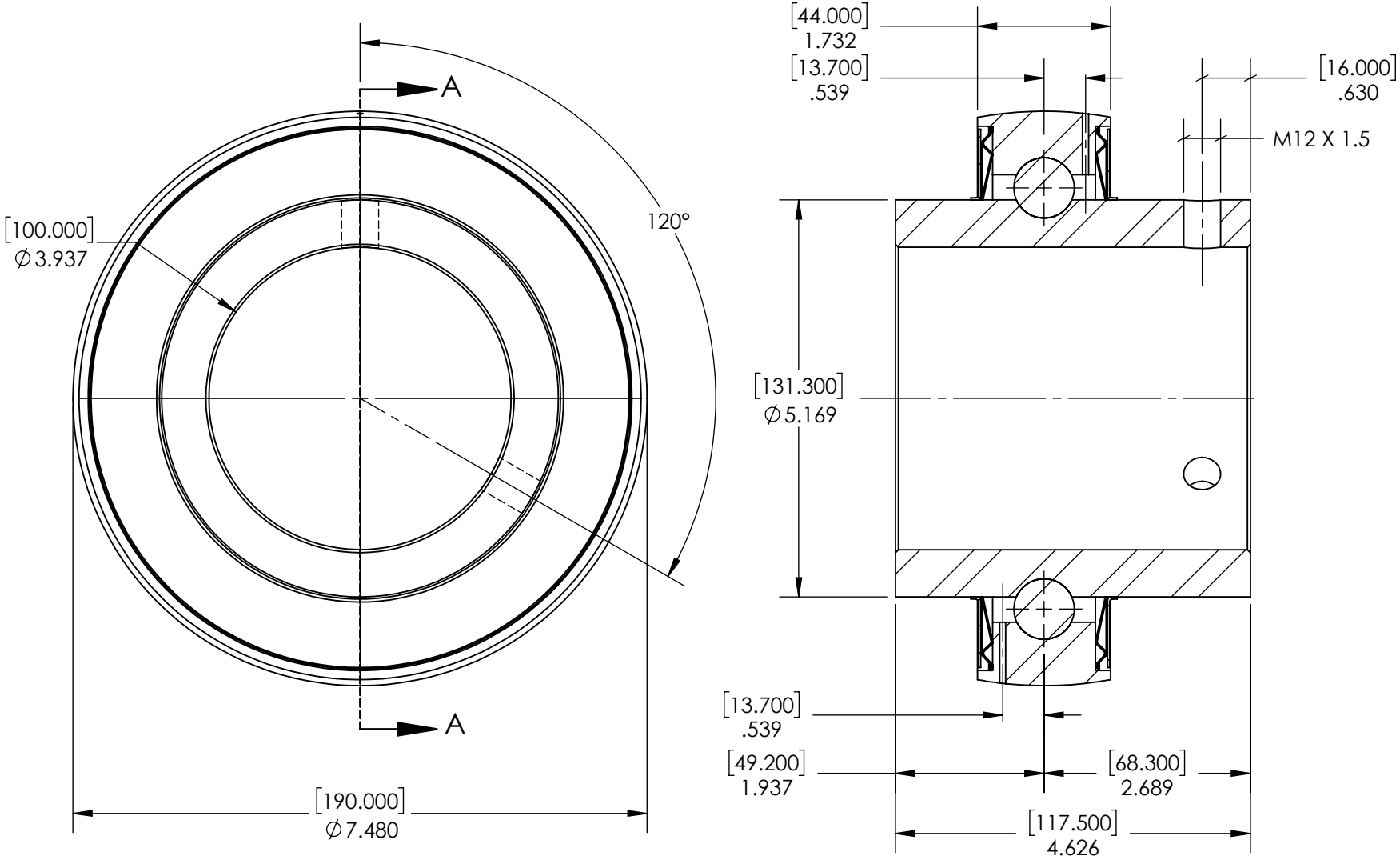

SECTION A-A

High Temp Bearings

TITLE:

100mm MEDIUM DUTY BALL BEARING

SIZE	DWG. NO.	REV
A	UCX20	A

SCALE: NTS | WEIGHT: 18.90LBS | SHEET 1 OF 1

5 4 3 2 1